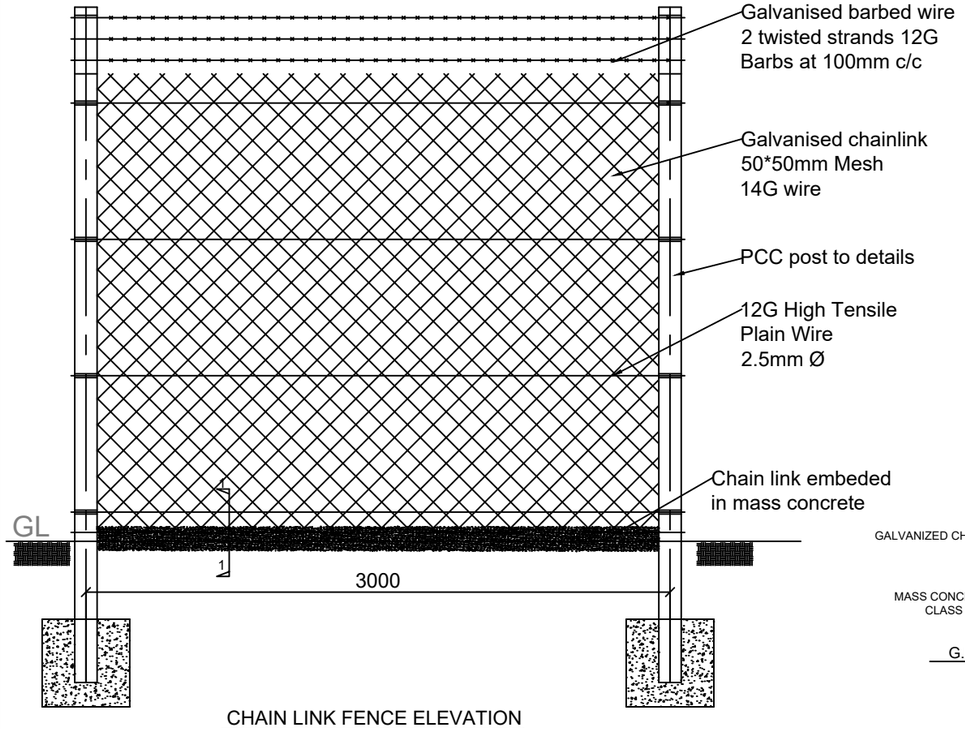

CHAIN LINK FENCE ELEVATION

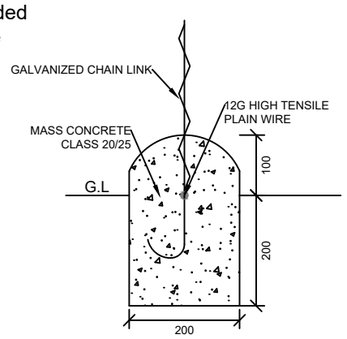

SECTION THRU' THE FENCE
SECTION 1-1

Image of Stay Post

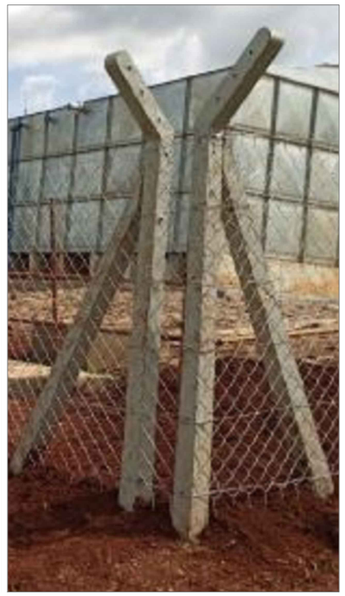

Image of Corner Post Type 1
for corner angle < 135°

Image of Corner Post Type 2
for corner angle > 135°

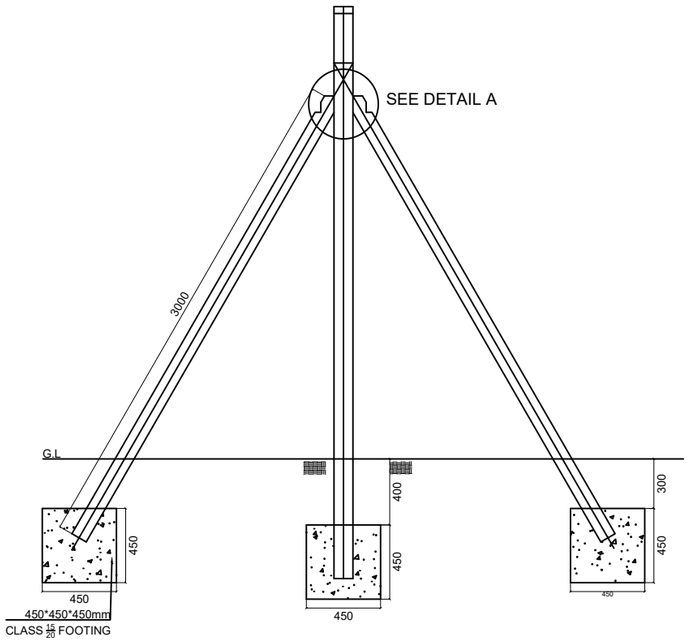

DETAILS FOR STAY POSTS

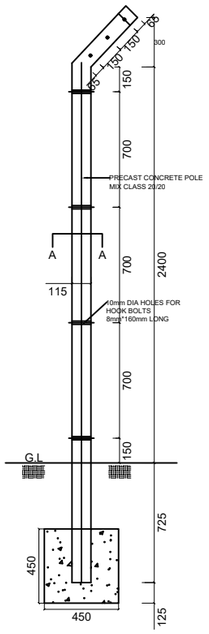

DETAILS FOR INTERMEDIATE
POST AT 3.0m C/C

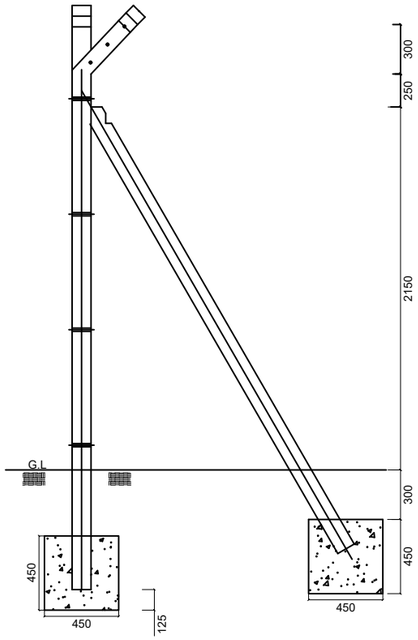

DETAILS CORNER POSTS

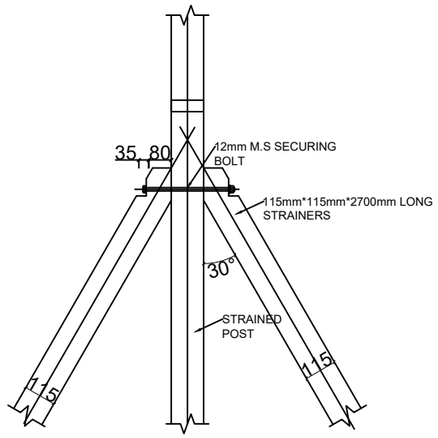

DETAIL A

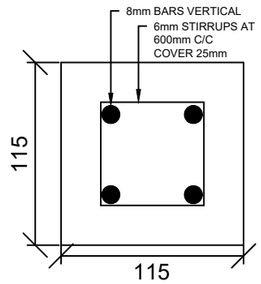

SECTION A-A

Revision	Approved by	Date	Ref: NO.
	K. Martin	2025/06/17	

Revision		TYPICAL DETAILS	
Approval	K. Martin		
Check	DMO	FENCE DETAILS	
Design	K.Martin		
Drawing	K. Martin		
Date	2025/06/17	Drawing No.	TAWWDA -TD - 04